CCpilot

PRODUCT CATALOG 2017

crosscontrol

AN ACTUANT COMPANY

The CCpilot range of robust display computers are applied to create a premium user experience in cost sensitive, commodity type vehicles as well as in advanced, specialized equipment. Through multi-functional capabilities, CCpilot display computers make dedicated devices for e.g. instrumentation, controls, video monitoring and wireless communication redundant, thereby reducing system hardware cost.

Product portfolio overview

PRODUCT	SIZE	TOUCH SCREEN	CPU	SOFTWARE	CAN	ETHERNET	USB	VIDEO
CCpilot VI	3"5	-	Freescale K70 (ARM)	PC-based configurator - QuiC	2x	-	1x	-
CCpilot VC	5"	Optional	Freescale i.MX 537 (ARM)	Linux. Qt, CoDeSys, C/C++ etc.	2x	1x	2x	1x
CCpilot VA	7"	Optional	Freescale i.MX 537 (ARM)	Linux. Qt, CoDeSys, C/C++ etc.	2x	1x	2x	2x
CCpilot XA	7"	Yes	Freescale i.MX 537 (ARM)	Linux. Qt, CoDeSys, C/C++ etc.	2 or 4x	1x	1x	4x
CCpilot XS	10"/12"	Yes	Freescale i.MX 537 (ARM)	Linux. Qt, CoDeSys, C/C++ etc.	2 or 4x	1x	1x	4x
CCpilot XM	10"/12"	Yes	Intel Atom E3826 (PC)	Linux or Win7. For Linux: Qt, CoDeSys, C/C++ etc.	4x	2x	2x	4x
CCpilot XL	12"	Optional	Intel core i7 3517UE (PC)	Win7	2x	1x	6x	4x

Page

4-5, CCpilot VI

6-7, CCpilot VC

8-9, CCpilot VA

10-11, CCpilot XA

12-13, CCpilot XS

14-15, CCpilot XM

16-17, CCpilot XL

(mm)

CCpilot VI FULL COLOR INSTRUMENTATION DISPLAY

CCpilot VI is an easily configurable, full-color 3''5 display enabling appealing user interfaces in a compact form factor.

Designed especially for the off-highway and industrial markets, CCpilot VI offers exceptional readability and all-weather performance. It is suitable for both bracket mounting and integration in a dashboard. With the QuiC™ software configuration tool you can rapidly program CCpilot VI without having specific software skills. **Turn for technical specifications »**

crosscontrol
AN ACTUANT COMPANY

CCpilot VI PRODUCT SPECIFICATIONS

KERNEL	
PROCESSOR	Freescale K70, 32-bit ARM Cortex M4
STORAGE	16 MB flash
RAM	8 MB

DISPLAY	
TYPE	TFT with LED backlight
SIZE AND RESOLUTION	3.5" QVGA, 320 x 240 pixels
COLOR DEPTH	24 bit
BRIGHTNESS	400 cd/m²
BACKLIGHT	LED, 400 cd/m²

HMI	
PUSH BUTTONS	4 x soft keys with LED illumination and tactile feedback
BUZZER	For sound notification

INTERFACES	
CAN	2 x CAN 2.0B channels J1939 or CANopen
USB	1 x USB 2.0
INPUTS	4 x Configurable as Voltage, Resistive, Frequency, Switch-to-Ground, or Switch-to-Battery
OUTPUT	2 x high-current, 1.25A, high-side switched outputs

SOFTWARE	
QuiC™	For configuration and interface design

POWER	
VOLTAGE	12/24 V nominal (9-32VDC)
ELECTRICAL PROTECTION	Reverse polarity, transients including load-dump, over-voltage, and ESD
CURRENT	Standby current draw <7 mA

ENVIRONMENT	
IP CLASS	IP66
EMC CONFORMITY	ISO 13766
TEMPERATURE RANGE (°C)	-40C to +70°C (operating*) -40C to +80°C (storage)

ENCLOSURE	
HOUSING MATERIAL	Nylon, ABS-PC
MOUNTING	Bracket or pedestal
CONNECTORS	2 x Deutsch DTM12-pin connectors

SIZE AND WEIGHT	
W x H x D (mm/inches)	108/4.25 x 103,5/4.07 x 42,8/1.68
WEIGHT (kg/lbs)	0.20/0.45

* Internal buzzer deactivated below -30°C.

crosscontrol
AN ACTUANT COMPANY

Sales contact: sales@crosscontrol.com | **General**: info@crosscontrol.com | www.crosscontrol.com

© 2016 CrossControl. All rights reserved. The information herein is supplied without any guarantees and can change without prior notification. Shielded cables may be necessary to fulfill industrial EMC standards. Some functionality may have limited operating temperatures. CANopen is a registered trademark of CAN in Automation (CiA).

(mm)

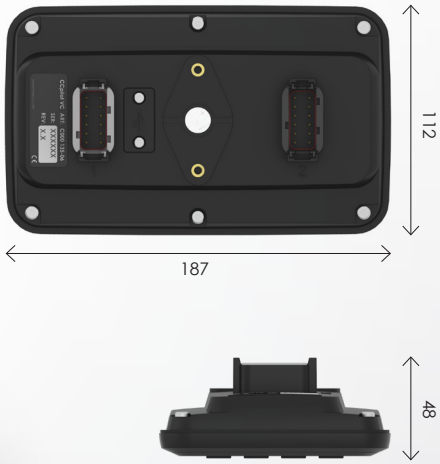

CCpilot VC FREELY PROGRAMMABLE MULTIFUNCTIONAL 5" DISPLAY

CCpilot VC is a 5'' full-colour display with a powerful ARM CPU. The open LinX software platform offers a choice of powerful tools for application development. This, together with a WVGA high brightness display and hardware accelerated 2D, 3D and vector graphics, enables fast design of premium user interfaces. With optional touch screen and configurable soft keys, operators are offered an intuitive interaction with the system.

CCpilot VC has multifunctional capability and can be used as instrumentation display, machine control HMI, video monitor, electronic manual and more. **Turn for technical specifications »**

Standard models

PART NUMBER	SOFT KEYS	TOUCH SCREEN	OPTICAL BONDING
C000 135-02	●		
C000 135-04		●	
C000 135-06	●	●	
C000 135-07	●		●

crosscontrol
AN ACTUANT COMPANY

CCpilot VC PRODUCT SPECIFICATIONS

COMPUTING CORE	
MAIN PROCESSOR	Freescale i.MX 537, 32 Bit ARM processor. Runs freely programmable Linux system and LinX Software Suite base package.
COPROCESSOR	Runs watchdog functions controlling integrity of product, for increased reliability and safety.
STORAGE	512 MB NAND flash for operating system and applications.
RAM	512 MB DDR3
GPU	Integrated Graphics Processing Unit supporting hardware accelerated 2D, 3D and vector graphics.

DISPLAY	
TYPE	TFT with LED backlight.
COVER LENS	Glass with anti-reflective treatment
SIZE AND RESOLUTION	5" WVGA, 800 x 480 pixels
COLOR DEPTH	24 bit
CONTRAST RATIO	600:1
BRIGHTNESS*	800Cd/m2 without touchscreen, 700 Cd/m2 with touch screen.
DIMMING	Automatic dimming through ambient light sensor. Dimming can be controlled manually via soft keys and/or touch screen.
OPTICAL BONDING	TFT and glass optically bonded. Optical bonding is optional.

HMI	
TOUCH SCREEN	Plastic cover lens with anti-reflective treatment.
SOFT KEYS	8 soft keys, configurable. Soft keys can be used as function keys for the GUI, to control Power On/Off, to control display brightness etc. Soft keys are optional.
BUZZER	Configurable buzzer for alarms and notifications.

INTERFACES	
CAN	Bitrate configurable 20 kbit/s - 1 Mbit/s.
ETHERNET	1 x Ethernet. 10/100 Base-T.
USB	1 in multipin connector and 1 mini-USB under cover on rear side.
INPUTS	2 configurable inputs for analog/digital sensors. May be used for measuring resistance/4-20mA/ frequency/digital/analog signals.
OUTPUT	2 configurable high side outputs for driving up to 1A. May be used for continuous driver or PWM output.
POWER SUPPLY	12 or 24 VDC nominal voltage. Voltage range 9-32 VDC. CPU and communication operational down to 6,0 VDC.
KEY SWITCH	1 x Key switch input, for start-up/shut down.
VIDEO	1 x Analog Video input. NTSC or PAL.

SOFTWARE	
OPERATING SYSTEM	Linux
SOFTWARE APPLICATION PLATFORM	LinX Software Suite, basic package. Extension modules available, eg. CODESYS.

ENVIRONMENT	
IP CLASS	IP66
EMC CONFORMITY	2004/108/EC, ISO 14982:2009
VIBRATIONS	0,02g2/Hz 5-500 Hz
SHOCK	30g/11ms 3x ±10 bumps
TEMPERATURE RANGE (°C)	Operating range: -25 to +70 Storage range: -40 to +85

ENCLOSURE	
HOUSING MATERIAL	Reinforced nylon
MECHANICAL INSTALLATION	Flush/panel mounting or mounting on stand/ arm with diamond plate.
CONNECTORS	3 x Deutsch DTM06-12 connectors, 1 x Mini USB

SIZE AND WEIGHT	
W x H x D (mm)	187 x 112 x 48
WEIGHT (kg)	0.42

* Typical values

crosscontrol
AN ACTUANT COMPANY

Sales contact: sales@crosscontrol.com | **General**: info@crosscontrol.com | www.crosscontrol.com

© 2016 CrossControl. All rights reserved. The information herein is supplied without any guarantees and can change without prior notification. Shielded cables may be necessary to fulfill industrial EMC standards. Some functionality may have limited operating temperatures. Windows are trademarks of Microsoft Corporation. Linux is the registered trademark of Linus Torvalds. Intel Atom is a trademark of Intel Corporation. Bluetooth is a trademark of Bluetooth SIG. CANopen is a registered trademark of CAN in Automation (CiA).

(mm)

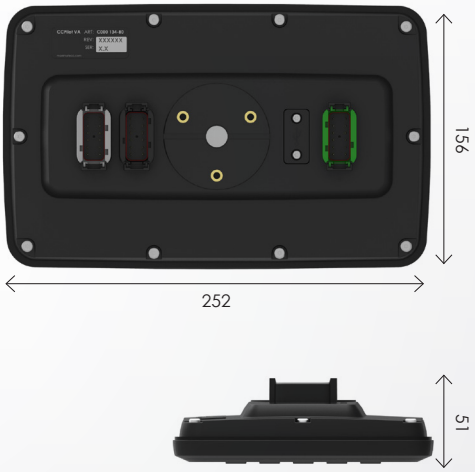

CCpilot VA FREELY PROGRAMMABLE MULTIFUNCTIONAL 7" DISPLAY

CCpilot VA is a 7" full-colour display with a powerful ARM CPU. The open LinX software platform offers a choice of powerful tools for application development. This, together with a WVGA high brightness display and hardware accelerated 2D, 3D and vector graphics, enables fast design of premium user interfaces. With optional all-glass PCAP touch screen and configurable soft keys, operators are offered an intuitive interaction with the system.

CCpilot VA has multifunctional capability and can be used as instrumentation display, machine control HMI, video monitor, electronic manual and more. **Turn for technical specifications »**

Standard models

PART NUMBER	SOFT KEYS	TOUCH SCREEN	OPTICAL BONDING
C000 134-80	●	●	
C000 134-81	●		
C000 134-82	●	●	●
C000 134-83	●		●

crosscontrol
AN ACTUANT COMPANY

CCpilot VA PRODUCT SPECIFICATIONS

COMPUTING CORE	
MAIN PROCESSOR	Freescale i.MX 537, 32 Bit ARM processor. Runs freely programmable Linux system and LinX Software Suite base package.
COPROCESSOR	Runs watchdog functions controlling integrity of product, for increased reliability and safety.
STORAGE	512 MB NAND flash for operating system and applications.
RAM	512 MB DDR3
GPU	Integrated Graphics Processing Unit supporting hardware accelerated 2D, 3D and vector graphics.

DISPLAY	
TYPE	TFT with LED backlight
COVER LENS	Glass with anti-reflective treatment.
SIZE AND RESOLUTION	7" WVGA, 800 x 480 pixels
COLOR DEPTH	24 bit
CONTRAST RATIO	600:1
BRIGHTNESS*	500 cd/m²
DIMMING	Automatic dimming through ambient light sensor. Dimming can be controlled manually via soft keys and/or touch screen.
OPTICAL BONDING	Optical bonding, TFT and glass or touch screen optically bonded. Optical bonding is optional.

HMI	
TOUCH SCREEN	Glass cover lens with anti-reflective treatment.
SOFT KEYS	10 soft keys, configurable. Soft keys can be used as function keys for the GUI, to control Power On/Off, to control display brightness etc. Soft keys are optional.
BUZZER	Configurable buzzer for alarms and notifications.

INTERFACES	
CAN	Bitrate configurable 20 kbit/s - 1 Mbit/s.
ETHERNET	1 x Ethernet. 10/100 Base-T.
USB	1 in multipin connector and 1 mini-USB under cover on rear side
INPUTS	8 configurable inputs for analog/digital sensors. May be used for measuring resistance/4-20mA/ frequency/digital/analog signals.
OUTPUTS	2 configurable high side outputs for driving up to 1A. May be used for continuous driver or PWM output.
POWER SUPPLY	12 or 24 VDC nominal voltage. Voltage range 9-32 VDC. CPU and communication operational down to 6,0 VDC.
KEY SWITCH	1 x Key switch input, for start-up/shut down.
VIDEO	2 x Analog Video input. NTSC or PAL.

SOFTWARE	
OPERATING SYSTEM	Linux
SOFTWARE APPLICATION PLATFORM	LinX Software Suite, basic package. Extension modules available, eg. CODESYS.

ENVIRONMENT	
IP CLASS	IP66 and IP67
EMC CONFORMITY	2004/108/EC, ISO 14982:2009, ISO 13309:2010
VIBRATIONS	IEC 60068-2-64 Random 0.02g²/Hz 5-2000Hz 3x3h
SHOCK	IEC 60068-2-27 50 g/11ms ±3 x 3 shocks
TEMPERATURE RANGE (°C)	Operating: -30 to +70 Storage: -40 to +85

ENCLOSURE	
HOUSING MATERIAL	Reinforced nylon
MECHANICAL INSTALLATION	Panel mounting or mounting on stand/arm
CONNECTORS	3 x Deutsch DTM06-12 connectors, 1 x Mini USB

SIZE AND WEIGHT	
W x H x D (mm)	252 x 156 x 51
WEIGHT (kg)	0.65

* Typical values

crosscontrol
AN ACTUANT COMPANY

Sales contact: sales@crosscontrol.com | **General**: info@crosscontrol.com | www.crosscontrol.com

© 2016 CrossControl. All rights reserved. The information herein is supplied without any guarantees and can change without prior notification.
Shielded cables may be necessary to fulfill industrial EMC standards. Some functionality may have limited operating temperatures. Windows are trademarks of Microsoft Corporation. Linux is the registered trademark of Linus Torvalds. Intel Atom is a trademark of Intel Corporation. Bluetooth is a trademark of Bluetooth SIG. CANopen is a registered trademark of CAN in Automation (CiA).

(mm)

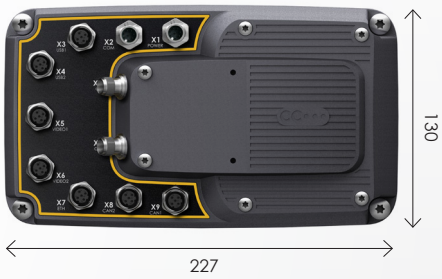

CCpilot XA FREELY PROGRAMMABLE MULTIFUNCTIONAL 7" DISPLAY

CCpilot XA is a 7" full-color touch screen display with a powerful ARM CPU and a robust aluminium enclosure to endure the most challenging operating environments. The open software platform has a choice of tools for design of premium graphical user interfaces. This, together with WVGA resolution and high brightness display, enables fast design of sharp user interfaces. With all-glass PCAP touch screen operators are offered an intuitive interaction with the system.

CCpilot XA has multifunctional capability and can be used as instrumentation display, machine control HMI, video monitor, electronic manual and more. It also features optional built-in wireless interfaces like WLAN, GPRS and Bluetooth. **Turn for technical specifications »**

Standard models

PART NUMBER	WIRED INTERFACES VERSION		MOUNTING VERSION		WIRELESS INTERFACE OPTION
	Standard	Net+	Vesa	Panel	
C000 126-50	●		●		
C000 126-51	●		●		●
C000 126-62	●			●	
C000 126-250	●			●	
C000 126-251	●			●	●
C000 126-263		●		●	●

crosscontrol
AN ACTUANT COMPANY

CCpilot XA PRODUCT SPECIFICATIONS

COMPUTING CORE	
MAIN PROCESSOR	Freescale i.MX 537, 32 Bit ARM processor. Runs freely programmable Linux system and LinX Software Suite base package.
COPROCESSOR	Runs watchdog functions controlling integrity of product, for increased reliability and safety.
STORAGE	4 GB flash for for operating system and applications.
RAM	256 MB DDR3
GPU	Integrated Graphics Processing Unit supporting hardware accelerated 2D, 3D and vector graphics.

DISPLAY	
TYPE	TFT with LED backlight.
COVER LENS	PCAP touch screen
SIZE AND RESOLUTION	7" WVGA, 800 x 480 pixels
COLOR DEPTH	24 bit
CONTRAST RATIO	600:1
BRIGHTNESS*	500 cd/m²
DIMMING	Automatic dimming through ambient light sensor. Dimming can be controlled manually via soft keys and/or touch screen.

HMI	
TOUCH SCREEN	PCAP
SOFT KEYS	3 soft keys, configurable. Default function is Power On/Off and control of display brightness.
STATUS LED	Configurable status LED in front panel. Default function is for boot-up status and faults.
BUZZER	Configurable buzzer for alarms and notifications.

INTERFACES - COMMON FOR ALL VERSIONS	
ETHERNET	1 x Ethernet. 10/100 Base-T.
SERIAL	1 x RS232. Galvanically isolated.
AUDIO	Stereo line out
POWER SUPPLY	12 or 24 VDC nominal voltage. Voltage range 10-34 VDC. CPU and communication operational down to 6,0 VDC.

INTERFACES - STANDARD VERSION	
USB	1 x USB 2.0.
CAN	2 x CAN, physical layer ISO 11898 2.0B. Bitrate configurable 20 kbps - 1 Mbps. Galvanically isolated.
VIDEO	4 x Analogue Video in, NTSC or PAL. 4 x video power supply, 12V, combined current limit at 0.5A, individual on/off control.
DIGITAL I/O	4 x Configurable as in or out. Galvanically isolated.

INTERFACES - NET+ VERSION	
CAN	4 x CAN, physical layer ISO 11898 2.0B. Bitrate configurable 20 kbps - 1 Mbps. CAN power output: 1A shared by all outputs. Not galvanically isolated.
USB	2 x USB 2.0.

OPTION 'ALL-INTEGRATED', BUILT-IN WIRELESS INTERFACES	
GPS	GPS receiver from U-Blox/Fastrax. Module designation: IT530. Active antenna, 3.3V, 50 mA bias.
GPRS/3G	GSM/GPRS modem from Telit. Module designation: GE865-QUAD.
WLAN	Complete 802.11 b/g radio solution from WI2WI. Module designation: W2SW0001C.
BLUETOOTH	HCI Bluetooth. Fully integrated Bluetooth 2.1 class 1 module from BlueGiga. Module designation: WT11i-E-HCI21.

SOFTWARE	
OPERATING SYSTEM	Linux
SOFTWARE APPLICATION PLATFORM	LinX Software Suite, basic package. Extension modules available, eg. CODESYS.

ENVIRONMENT	
IP CLASS	IP65
EMC CONFORMITY	2004/108/EC, EN61000-6-2:2005, EN61000-6-4:2007, ISO 14982:2009
VIBRATIONS	0,01g2/Hz 5-200 Hz
SHOCK	5 g/11ms 3x ±1000 bumps
TEMPERATURE RANGE (°C)	Operating: -25 to +70 Storage: -40 to +85

ENCLOSURE	
HOUSING MATERIAL	Aluminium
MECHANICAL INSTALLATION	One version for flush/panel mounting and one version for mounting on stand/arm with VESA 50 bracket.
CONNECTORS	DIN M12 for all wired interfaces. SMA for wireless interfaces/antennas.

SIZE AND WEIGHT	
W x H x D (mm)	227 x 130 x 53
WEIGHT (kg)	1.1

* Typical values

crosscontrol
AN ACTUANT COMPANY

Sales contact: sales@crosscontrol.com | **General**: info@crosscontrol.com | www.crosscontrol.com

© 2016 CrossControl. All rights reserved. The information herein is supplied without any guarantees and can change without prior notification.
Shielded cables may be necessary to fulfill industrial EMC standards. Some functionality may have limited operating temperatures. Windows are trademarks of Microsoft Corporation. Linux is the registered trademark of Linus Torvalds. Intel Atom is a trademark of Intel Corporation. Bluetooth is a trademark of Bluetooth SIG. CANopen is a registered trademark of CAN in Automation (CiA).

CCpilot XS FREELY PROGRAMMABLE MULTIFUNCTIONAL 10" AND 12" DISPLAY

CCpilot XS is a 10" and 12" full-color touch screen display with a powerful ARM CPU and a robust aluminium enclosure to endure the most challenging operating environments. The open software platform has a choice of tools for design of premium graphical user interfaces. This, together with XGA resolution, enables fast design of sharp user interfaces.
CCpilot XS has multifunctional capability and can be used as instrumentation display, machine control HMI, video monitor, electronic manual and more. It also features optional built-in wireless interfaces like WLAN, GPRS and Bluetooth. **Turn for technical specifications »**

Standard models

PART NUMBER	DISPLAY SIZE		WIRED INTERFACES VERSION		MOUNTING VERSION		WIRELESS INTERFACE OPTION
	10"4	12"1	Standard	Net+	Vesa	Panel	
C000 126-52	●		●		●		
C000 126-53	●		●		●		●
C000 126-252	●		●			●	
C000 126-253	●		●			●	●
C000 126-265	●			●	●		
C000 126-280		●	●		●		
C000 126-282		●	●		●		●
C000 126-54		●	●			●	
C000 126-55		●	●			●	●
C000 126-316		●		●	●		

crosscontrol
AN ACTUANT COMPANY

CCpilot XS PRODUCT SPECIFICATIONS

COMPUTING CORE	
MAIN PROCESSOR	Freescale i.MX 537, 32 Bit ARM processor. Runs freely programmable Linux system and LinX Software Suite base package.
COPROCESSOR	Runs watchdog functions controlling integrity of product, for increased reliability and safety.
STORAGE	4 GB flash for for operating system and applications.
RAM	256 MB DDR3
GPU	Integrated Graphics Processing Unit supporting hardware accelerated 2D, 3D and vector graphics.

DISPLAY	
TYPE	TFT with LED backlight.
COVER LENS	Plastic with anti-glare treatment.
SIZE AND RESOLUTION	10''4 or 12''1, XGA, 1024 x 768 pixels
COLOR DEPTH	24 bit
CONTRAST RATIO	10" - 700:1, 12" - 600:1
BRIGHTNESS*	10" - 600 cd/m² 12" - 500cd/m²
DIMMING	Automatic dimming through ambient light sensor. Dimming can be controlled manually via soft keys and/or touch screen.

HMI	
TOUCH SCREEN	Resistive
SOFT KEYS	3 soft keys, configurable. Default function is Power On/Off and control of display brightness.
STATUS LED	Configurable status LED in front panel. Default function is for boot-up status and faults.
BUZZER	Configurable buzzer for alarms and notifications.

INTERFACES - COMMON FOR ALL VERSIONS	
ETHERNET	1 x Ethernet. 10/100 Base-T.
SERIAL	1 x RS232. Galvanically isolated.
AUDIO	Stereo line out.
POWER SUPPLY	12 or 24 VDC nominal voltage. Voltage range 10-34 VDC. CPU and communication operational down to 6,0 VDC.

INTERFACES - STANDARD VERSION	
USB	1 x USB 2.0.
CAN	2 x CAN, physical layer ISO 11898 2.0B. Bitrate configurable 20 kbps - 1 Mbps. Galvanically isolated.
VIDEO	4 x Analogue Video in, NTSC or PAL. 4 x video power supply, 12V, combined current limit at 0.5A, individual on/off control.
DIGITAL I/O	4 x Configurable as in or out. Galvanically isolated.

INTERFACES - NET+ VERSION	
CAN	4 x CAN, physical layer ISO 11898 2.0B. Bitrate configurable 20 kbps - 1 Mbps. CAN power output: 1A shared by all outputs. Not galvanically isolated.
USB	2 x USB 2.0.

OPTION 'ALL-INTEGRATED', BUILT-IN WIRELESS INTERFACES	
GPS	GPS receiver from U-Blox/Fastrax. Module designation: IT530. Active antenna, 3.3V, 50 mA bias.
GPRS/3G	GSM/GPRS modem from Telit. Module designation: GE865-QUAD.
WLAN	Complete 802.11 b/g radio solution from WI2WI. Module designation: W2SW0001C.
BLUETOOTH	HCI Bluetooth. Fully integrated Bluetooth 2.1 class 1 module from BlueGiga. Module designation: WT11i-E-HCI21.

SOFTWARE	
OPERATING SYSTEM	Linux
SOFTWARE APPLICATION PLATFORM	LinX Software Suite, basic package. Extension modules available, eg. CODESYS.

ENVIRONMENT	
IP CLASS	IP65
EMC CONFORMITY	2004/108/EC, EN61000-6-2:2005, EN61000-6-4:2007, ISO 14982:2009
VIBRATIONS	0,01g2/Hz 5-200 Hz
SHOCK	5 g/11ms 3x ±1000 bumps
TEMPERATURE RANGE (°C)	Operating: -25 to +70 Storage: -40 to +85

ENCLOSURE	
HOUSING MATERIAL	Aluminium
MECHANICAL INSTALLATION	One version for flush/panel mounting and one version for mounting on stand/arm with VESA 50 bracket.
CONNECTORS	DIN M12 for all wired interfaces. SMA for wireless interfaces/antennas.

SIZE AND WEIGHT	
W x H x D (mm)	10": 278 x 215 x 69 12": 316 x 251 x 72,2
WEIGHT (kg)	10": 2.2 12": 3.1

* Typical values

crosscontrol
AN ACTUANT COMPANY

Sales contact: sales@crosscontrol.com | **General**: info@crosscontrol.com | www.crosscontrol.com

© 2016 CrossControl. All rights reserved. The information herein is supplied without any guarantees and can change without prior notification. Shielded cables may be necessary to fulfill industrial EMC standards. Some functionality may have limited operating temperatures. Linux is the registered trademark of Linus Torvalds. Intel Atom is a trademark of Intel Corporation. Bluetooth is a trademark of Bluetooth SIG. CANopen is a registered trademark of CAN in Automation (CiA).

(mm)

CCpilot XM PC-BASED TOUCH SCREEN DISPLAY

CCpilot XM is a 10" and 12" PC-based touch screen display computer for creating advanced HMI systems where process controls, video monitoring and other operator support functionalities are integrated.

The open software platform has a choice of tools for application engineering. This, together with XGA resolution and hardware accelerated 2D, 3D and vector graphics, enables fast design of premium user interfaces. With its industrial grade Intel Atom E3826 dual core CPU and a robust aluminium enclosure, it delivers dependable and state-of-the-art performance in demanding applications.

Turn for technical specifications »

Standard models

PART NUMBER	DISPLAY SIZE		OPERATING SYSTEM		MOUNTING VERSION	
	10"4	12"1	Win	Linux	Vesa	Panel
C000 122-390	●		●		●	
C000 122-392	●			●	●	
C000 122-430	●		●			●
C000 122-431		●	●		●	
C000 122-432	●			●		●
C000 122-433		●		●	●	
C000 122-434		●	●			●
C000 122-436		●		●		●

crosscontrol
AN ACTUANT COMPANY

CCpilot XM PRODUCT SPECIFICATIONS

COMPUTING CORE	
MAIN PROCESSOR	Intel Atom E3826 dual core
COPROCESSOR	Runs watchdog functions controlling integrity of product, for increased reliability and safety.
STORAGE	8 GB, CFast
RAM	2 GB, DDR3L
GPU	Intel® HD Graphics Gen 7. Integrated Graphics Processing Unit supporting hardware accelerated 2D, 3D and vector graphics.

DISPLAY	
TYPE	TFT with LED backlight.
COVER LENS	Plastic with anti-glare treatment
SIZE AND RESOLUTION	10"4 or 12"1, XGA, 1024 x 768 pixels
COLOR DEPTH	24 bit
CONTRAST RATIO	10" - 700:1, 12" - 600:1
BRIGHTNESS*	10" - 600 cd/m², 12" - 500 cd/m²
DIMMING	Automatic dimming through ambient light sensor. Dimming can be controlled manually via soft keys and/or touch screen.

HMI	
TOUCH SCREEN	Resistive
SOFT KEYS	3 soft keys, configurable. Default function is Power On/Off and control of display brightness.
STATUS LED	Configurable status LED in front panel. Default function is for boot-up status and faults.
BUZZER	Configurable buzzer for alarms and notifications.

INTERFACES	
CAN	4 x CAN, physical layer ISO 11898 2.0B. Bit-rate configurable 20 kbps - 1 Mbps. 2 CAN ports galvanically isolated. 2 CAN ports with CAN power, current up to 2 A, single on/off control.
ETHERNET	2 x Ethernet. 10/100 Base-T.
USB	2 x USB 2.0
SERIAL	1 x RS232. Galvanically isolated.
DIGITAL IN	4 x Digital In, pull-up.
VIDEO	4 x Analogue Video in, NTSC or PAL. 4 x video power, 12V, combined current limit at 1A, individual on/off control.
AUDIO	Stereo line out, line in, mic in
POWER SUPPLY	12 or 24 VDC nominal voltage. Voltage range 10-34 VDC. CPU and communication operational down to 6,0 VDC.

SOFTWARE	
OPERATING SYSTEM	Win7 or Yocto-based Linux system with kernel 3.10+
SOFTWARE APPLICATION PLATFORM	LinX Software Suite, basic package. Extension modules available, eg. CoDeSys.

ENVIRONMENT	
IP CLASS	IP65
EMC CONFORMITY	2004/108/EC, EN61000-6-2:2005, EN61000-6-4:2007, ISO 14982:2009, ISO 13766:2006, ISO 7637-2:2011 - Test level III, ISO/TR 10605:2008
VIBRATIONS	0,01g2/Hz 5-200 Hz
SHOCK	5 g/11ms 3x ±1000 bumps
TEMPERATURE RANGE (°C)	Operating: -25 to +70 Storage: -40 to +85

ENCLOSURE	
HOUSING MATERIAL	Aluminium
MECHANICAL INSTALLATION	One version for flush/panel mounting and one version for mounting on stand/arm with VESA 75 bracket
CONNECTORS	DIN M12, SMA for antennas.

SIZE AND WEIGHT	
W x H x D (mm)	10": 278 x 215 x 72 12": 316 x 251 x 73
WEIGHT (kg)	10": 2.9 12": 3.5

* Typical values

crosscontrol
AN ACTUANT COMPANY

Sales contact: sales@crosscontrol.com | **General**: info@crosscontrol.com | www.crosscontrol.com

© 2016 CrossControl. All rights reserved. The information herein is supplied without any guarantees and can change without prior notification. Check www.crosscontrol.com for latest version. Shielded cables may be necessary to fulfill industrial EMC standards. Some functionality may have limited operating temperatures. Windows are trademarks of Microsoft Corporation. Linux is the registered trademark of Linus Torvalds. Intel Atom is a trademark of Intel Corporation. Bluetooth is a trademark of Bluetooth SIG. CANopen is a registered trademark of CAN in Automation (CiA).

PRELIMINARY

(mm)

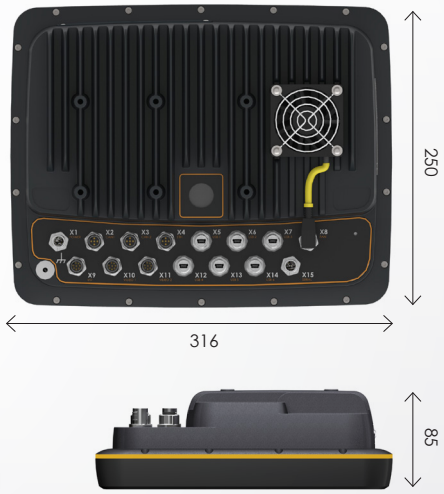

CCpilot XL HIGH-PERFORMANCE ON-BOARD PC

CCpilot XL is a 12" PC-based touch screen display computer with Intel i7 core and Win7 image for efficient deployment of advanced HMI systems and applications. The XL has been in the market for more than 10 years, gradually upgraded in performance and features to provide a robust and dependable PC display platform for the industry's most sophisticated on-board control and automation systems.

Turn for technical specifications »

The content herein is preliminary and may be subject to change without further notice.

crosscontrol
AN ACTUANT COMPANY

CCpilot XL PRODUCT SPECIFICATIONS

COMPUTING CORE	
MAIN PROCESSOR	Intel core i7 3517UE @ 2 x 1.7GHz
COPROCESSOR	Runs watchdog functions controlling integrity of product, for increased reliability and safety.
STORAGE	128 GB, MLC C-Fast. Extra C-fast slot available for optional seconadry disk, enabling on-board data back-up.
RAM	4 GB
GPU	Intel HD graphics 4000. Integrated Graphics Processing Unit supporting hardware accelerated 2D, 3D and vector graphics.

DISPLAY	
TYPE	TFT with LED backlight
COVER LENS	Plastic with anti-glare treatment
SIZE AND RESOLUTION	12.1", XGA, 1024 x 768 pixels
COLOR DEPTH	24 bit
CONTRAST RATIO	600:1
BRIGHTNESS*	500 cd/m² (Touch screen: 400 cd/m²)
DIMMING	Automatic dimming through ambient light sensor. Dimming can be controlled manually via soft keys and/or touch screen.

HMI	
TOUCH SCREEN	Resistive. Option to replace touch screen with anti reflex treated glass cover lens.
SOFT KEYS	3 soft keys, configurable. Deafult function is Power On/Off and control of display brightness.
STATUS LED	Configurable status LED in front panel. Default function is for boot-up status and faults.
BUZZER	Configurable buzzer for alarms and notifications.
PC BEEPER	Beeper for standard Windows PC sound notifications.

INTERFACES	
CAN	2 x CAN, physical layer ISO 11898 2.0B. Bit-rate configurable 20 kbit/s - 250 kbit/s. CAN power, current up to 2 A, single on/off control. To avoid interference caused by EMC the max speed should be limited to 250 kbit/s. Using higher bit rates requires adapted filtering, available as an optional adaption, and shielded cables.
ETHERNET	1 x Ethernet. 10/100 Base-T.
USB	6 x USB 2.0 USB data signal integrity at hi-speed communication must be tested with the specific cabling and peripherals used in the actual application. Use appropriate high quality USB cables and connectors.
SERIAL	1 x RS232. Up to 115 200 baud Rx, Tx, RTS, CTS, GND
DIGITAL IN	4 x Digital In, with 5 kOhm internal pull-up to input voltage.
VIDEO	4 x Analogue Video in, NTSC or PAL. 4 x video power, 12V, combined current limit at 1A, individual on/off control.
POWER SUPPLY	12 or 24 VDC nominal voltage. Voltage range 10-32 VDC. CPU and communication operational down to 7,0 VDC.

SOFTWARE	
OPERATING SYSTEM	Win7

ENVIRONMENT	
IP CLASS	IP54
EMC CONFORMITY	2004/108/EC, ISO 14982:2009
VIBRATIONS	0,01 g2/Hz 5-200 Hz 3x1h
SHOCK	5 g/11ms 3x ±1000 bumps
TEMPERATURE RANGE (°C)	Operating: -25 to +55 Storage: -40 to +60

ENCLOSURE	
HOUSING MATERIAL	Aluminium
MECHANICAL INSTALLATION	For mounting on stand/arm with VESA 75 bracket.
CONNECTORS	DIN M12

SIZE AND WEIGHT	
W x H x D (mm)	316 x 251 x 85
WEIGHT (kg)	3.5

* Typical values

crosscontrol
AN ACTUANT COMPANY

Sales contact: sales@crosscontrol.com | **General**: info@crosscontrol.com | www.crosscontrol.com

© 2016 CrossControl. All rights reserved. The information herein is supplied without any guarantees and can change without prior notification. Shielded cables may be necessary to fulfill industrial EMC standards. Some functionality may have limited operating temperatures. Windows are trademarks of Microsoft Corporation. Intel Atom is a trademark of Intel Corporation.

CrossControl supports customers in making industrial vehicles and machines smart, safe and productive. Through operational excellence and engineering expertise, we are a trusted partner for OEMs and System Integrators across the world; Providing powerful platforms for machine intelligence, communication and human-machine interaction.

crosscontrol

AN ACTUANT COMPANY

Sales contact sales@crosscontrol.com | **General** info@crosscontrol.com | **www.crosscontrol.com**

© 2016 CrossControl. All rights reserved. The information herein is supplied without any guarantees and can change without prior notification. Check www.crosscontrol.com for latest version.