J-Series Poppet Cartridge Valves

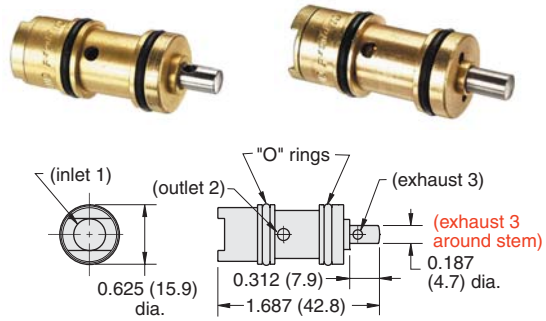

Input Pressure: 300 psig

Air Flow: 11 scfm @ 50 psig; 22 scfm @ 100 psig

Force For Full Stem Travel: 38 oz. nominal

Mounting: Inserts into a 5/8″ bore (0.625″ ±0.001″)

Note: See page 118 for mounting details

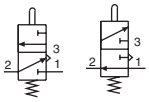

Part No.	Description
MJV-3C	3-Way Normally-Closed Poppet Cartridge Valve
MJVO-3C	3-Way Normally-Open Poppet Cartridge Valve

J-Series 3-Way Poppet Valves

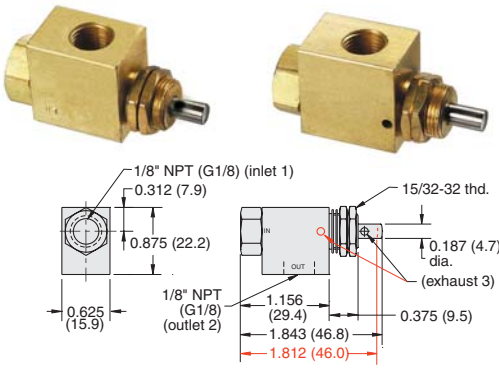

Input Pressure: MJV-3/MJV-3-MG - 300 psig/21 bar max.
MJVO-3/MJVO-3-MG - 150 psig/10 bar max.

Air Flow: 14.0 scfm @ 50 psig; 25 scfm @ 100 psig; 600 l/min @ 6 bar

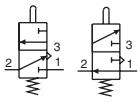

Force For Full Stem Travel: 38 oz. nominal

Mounting: 15/32-32 thread. Nuts and lockwashers furnished.

Part No.	Description
MJV-3	Normally-Closed Valve with Spring Return, 1/8″ NPT
MJV-3-MG	Normally-Closed Valve with Spring Return, G1/8
MJVO-3	Normally-Open Spool Valve, 1/8″ NPT
MJVO-3-MG	Normally-Open Spool Valve, G1/8

FV-Series 3-Way Spool Valves

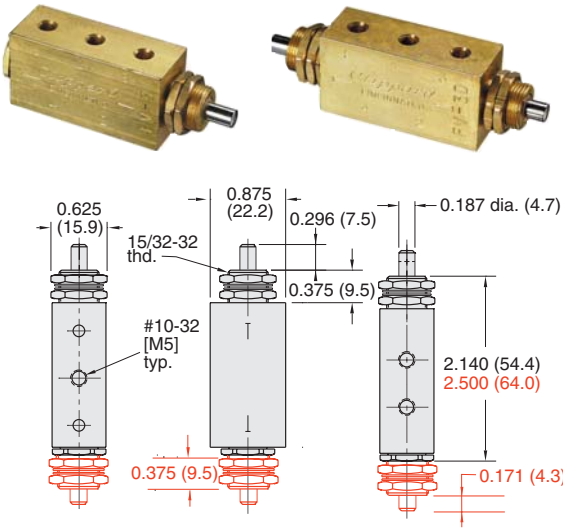

Input Pressure: Vacuum to 150 psig/10 bar max.

Air Flow: 6 scfm @ 50 psig; 10 scfm @ 100 psig; 240 l/min @ 6 bar

Force For Full Stem Travel: FV-3 & FV-3-M5 - 4 1/2 pounds nominal. FV-3D & FV-3D-M5 - 1 1/2 pounds nominal

Mounting: 5/32-32 thread. Nuts and lockwashers furnished.

Part No.	Description
FV-3	3-Way Spool Valve, #10-32
FV-3-M5	3-Way Spool Valve, M5
FV-3D	3-Way Two Position Spool Valve, #10-32
FV-3D-M5	3-Way Two Position Spool Valve, M5

FV-Series 3-Way Spool Valves

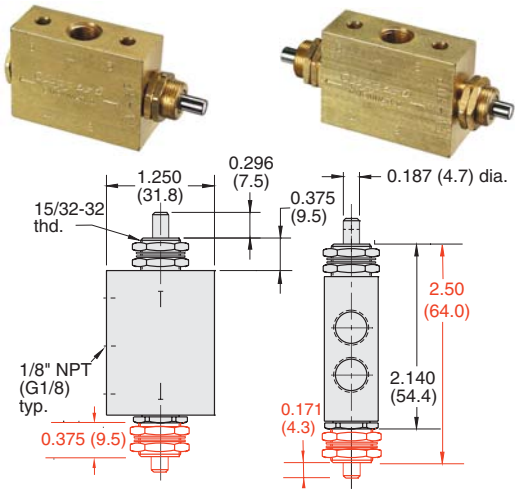

Input Pressure: Vacuum to 150 psig/10 bar max.

Air Flow: 6.5 scfm @ 50 psig; 10.5 scfm @ 100 psig; 240 l/min @ 6 bar

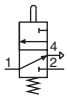

Force For Full Stem Travel: FV-3P & FV-3-MG - 4 1/2 pounds nominal. FV-3DP & FV-3D-MG - 1 1/2 pounds nominal

Mounting: 5/32-32 thread. Nuts and lockwashers furnished.

Part No.	Description
FV-3P	Spool Plunger Actuated Spring Return Valve, 1/8″ NPT
FV-3-MG	Spool Plunger Actuated Spring Return Valve, G1/8
FV-3DP	Spool Double Plunger 2 Position Valve, 1/8″ NPT
FV-3D-MG	Spool Double Plunger 2 Position Valve, G1/8